REVISION RECORD			
REV.	CONTENT	MOD.	DATE
A	初版发行		

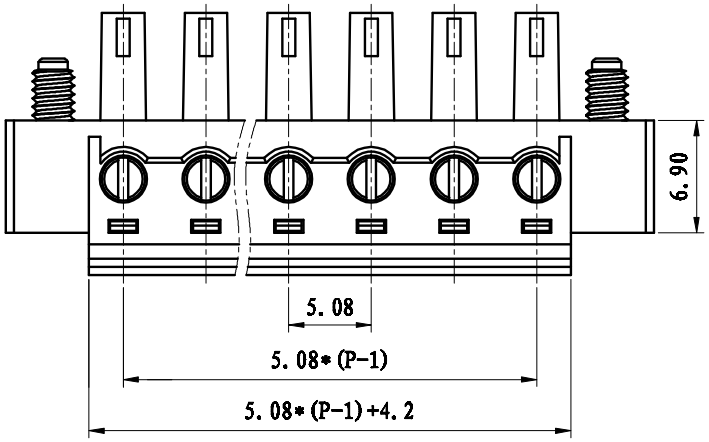

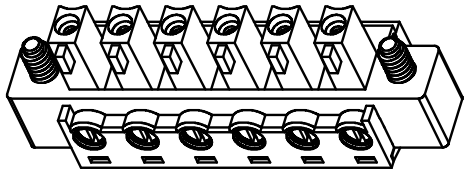

NOTES:
Pitch : 5.08mm
Rated Voltage : 300V
Rated Current : 8 A
Withstand Voltage :
AC2500V for 1 minute
Insulation Resistance :
500MΩ / DC500V
Using Temperature Range :
-40℃ ~ +105℃
Wire range : 28~ 16AWG
Screw Torque Value : 0.2N.m

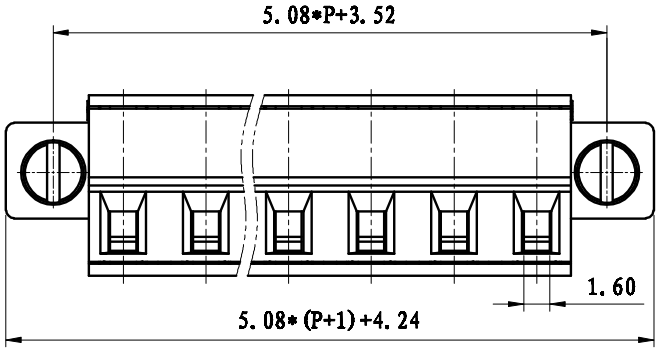

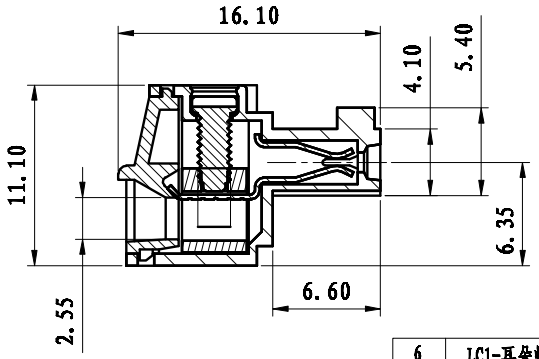

技术要求:
间距: 5.08mm
额定电压: 300V
额定电流: 8A
耐电压值: AC2500V/min
绝缘阻抗: 500MΩ/DC500V
使用条件: -40℃~+105℃
适用线规: 28~ 16AWG
螺丝扭矩: 0.2 N.m

	pitch dimension			Naminal dimension					
variable range	over 0 to 6	over 6 to 10	over 10 to 24	over 0 to 30	over 30 to 60	over 60 to 100	over 100 to 150	over 150	— ▱ ⌒
Tolerance	±0.1	±0.15	±0.25	±0.2	±0.3	±0.5	±0.7	±1.0	0.05/10

NO.	NAME OF PART	NO. OF PART	Q'TY	MATERIAL	NOTES
6	LC1-耳朵螺丝	SP0YA255302V	2	碳钢	三价铬纯化彩锌
5	LC1-3.81-螺丝	SP0YA204801V	P	碳钢	三价铬纯化彩锌
4	LC1-3.81-夹子	1002B0001AV	P	磷青铜	镀镍
3	LC1-3.81-铜方块	F1A0BLC3813V	P	黄铜	镀镍
2	LC5X-5.08-盖板	1038C0YXXAV	1	PA66-V0	
1	LC5XM-5.08-主体	1038M0YXXAV	1	PA66-V0	

DES.	ARKINE	DATE	2012/4/15	UNITS	mm	THIRD ANGLE PROJECTION	SHEET 1 of 1
CHK.		DATE		SIZE	A4		
APP.		DATE		SCALE		DWG NO.	SP-2-1038002 REV: V0

上海联捷电气有限公司
Shanghai Elinker Electric CO.,LTD

TITLE: LC5XM-5.08-XXP-1Y-00A
LC5XM-5.08-成品