REVISION RECORD			
REV.	CONTENT	MOD.	DATE
0	初版发行		

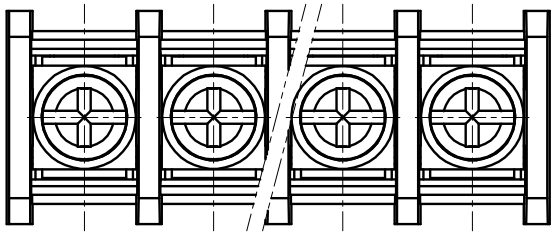

NOTES:
Pitch : 10.0mm
Rated Voltage : 300V
Rated Current : 20 A
Withstand Voltage :
AC2500V for 1 minute
Insulation Resistance :
1000MΩ / DC500V
Using Temperature Range :
- 40℃ ~ + 130℃
Wire range : 22~12 AWG
Screw Torque Value : 1.2Nm

技术要求:
间距: 10.0mm
额定电压: 300V
额定电流: 20A
耐电压值: AC2500V/min
绝缘阻抗: 1000MΩ / DC500V
使用条件: -40℃~+130℃
适用线规: 22~12 AWG
螺丝扭矩: 1.2Nm

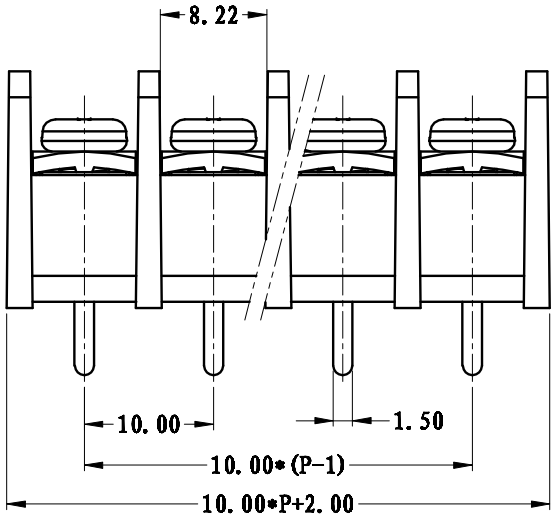

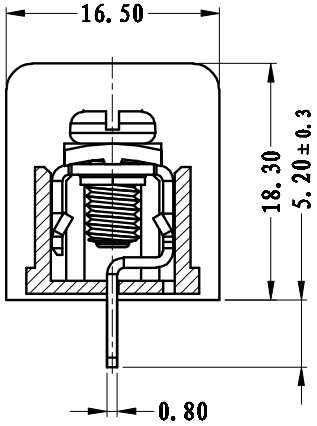

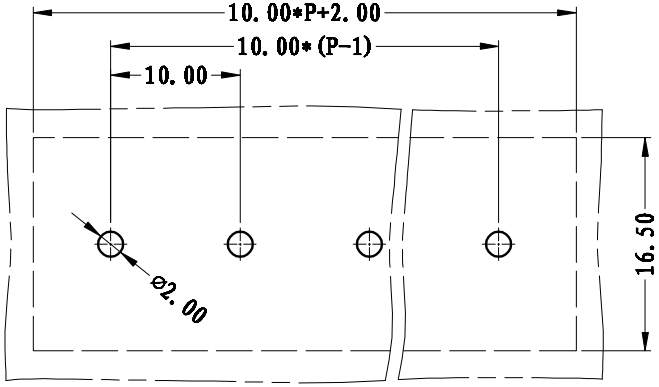

	pitch dimension			Naminal dimension					
variable range	over 0 to 6	over 6 to 10	over 10 to 24	over 0 to 30	over 30 to 60	over 60 to 100	over 100 to 150	over 150	
Tolerance	±0.1	±0.15	±0.25	±0.2	±0.3	±0.5	±0.7	±1.0	0.05/10

NO.	NAME OF PART	NO. OF PART	Q'TY	MATERIAL	NOTES
3	M4*8-7.5*7.5	SQFFA408043V	P	碳钢	三价铬钝化彩锌
2	LW1C-9.5-焊脚	5002B0001AV	P	黄铜	镀雾锡
1	LW1-10.0-本体	5009A0YXXAV	1	PBT	

DES.	ARKINE	DATE	11-03-25	UNITS	MM	THIRD ANGLE PROJECTION	SHEET
CHK.		DATE		SIZE	A4		1 of 1
APP.		DATE		SCALE	1:1	DWG NO. SP-2-5009001	REV: V0

上海联捷电气有限公司
Shanghai Elinker Electric C.O,LTD

TITLE: LW1C-10.0-XXP-1Y-00A
LW1C-10.0-成品