REVISION RECORD			
REV.	CONTENT	MOD.	DATE
0	初版发行		

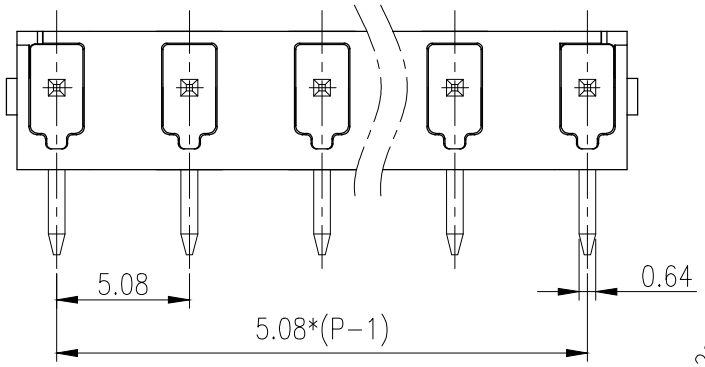

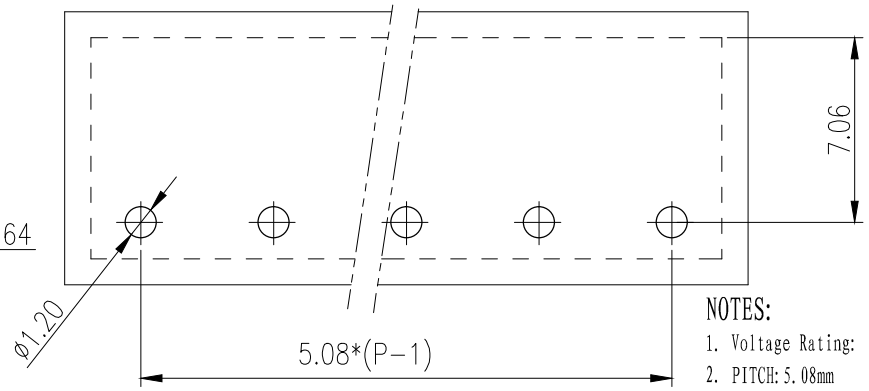

NOTES:

1. Voltage Rating: 300V, Current Rating: 6A
2. PITCH: 5.08mm
3. Insulation Withstands Voltage: AC2000V/min
4. Using Temperature Range: -40℃ ~ +105℃
5. Suitable Electric Wire: 26-20AWG

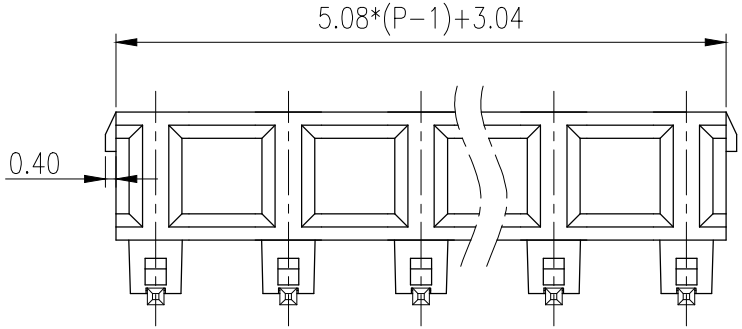

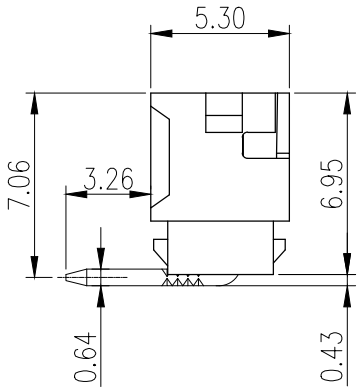

技术要求:

1. 额定电压: 300V, 额定电流: 6A
2. 间距: 5.08mm
3. 耐电压值: AC 2000V/min
4. 使用条件: -40℃ ~ +105℃
5. 适用线规: 26-20AWG

	pitch dimension			Naminal dimension					—
variable range	over 0 to 6	over 6 to 10	over 10 to 24	over 0 to 30	over 30 to 60	over 60 to 100	over 100 to 150	over 150	▱ ⌒
Tolerance	±0.1	±0.15	±0.25	±0.2	±0.3	±0.5	±0.7	±1.0	0.05/10

2	LZ1-2.54弯针	1008B0004AV	P	黄铜	镀亮锡	
1	LZ8X-5.08主体	1200A0YXXAV	1	PA66		
NO.	NAME OF PART	NO. OF PART	Q'TY	MATERIAL	NOTES	
DES.	CMZ	DATE 24/07/10	UNITS mm	THIRD ANGLE PROJECTION		SHEET 1 of 1
CHK.		DATE	SIZE A4			
APP.		DATE	SCALE 1:1	DWG NO.	SP-2-1168002	REV: V0
上海联捷电气有限公司 Shanghai Elinker Electric CO.,LTD				TITLE	LZ8XR-5.08-XXP-1Y-00A	
					LZ8XR-5.08-成品	