| REVISION RECORD | | | |
|---|---|---|---|
| REV. | CONTENT | MOD. | DATE |
| 0 | 初版发行 | | |

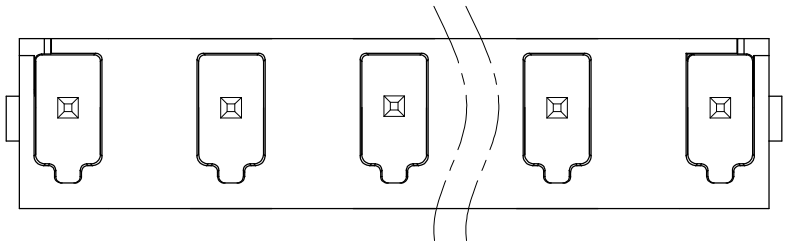

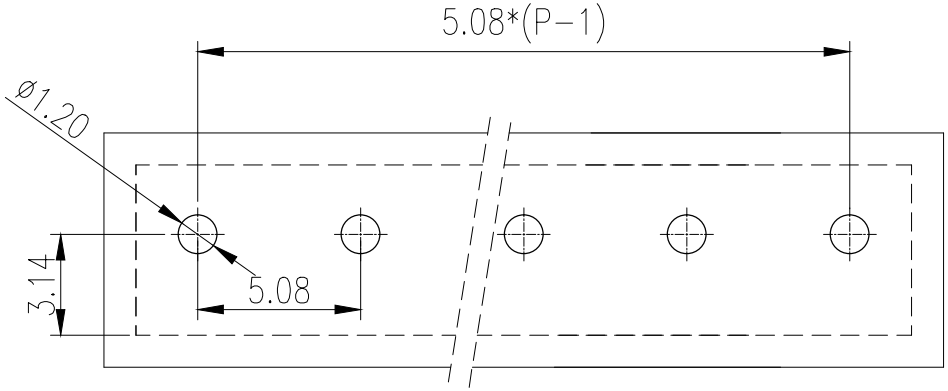


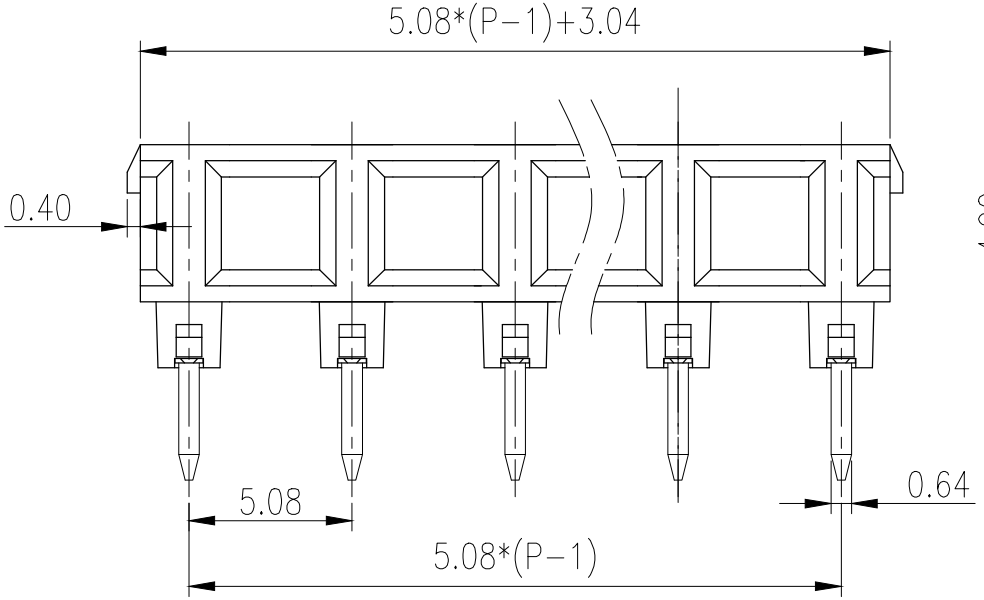


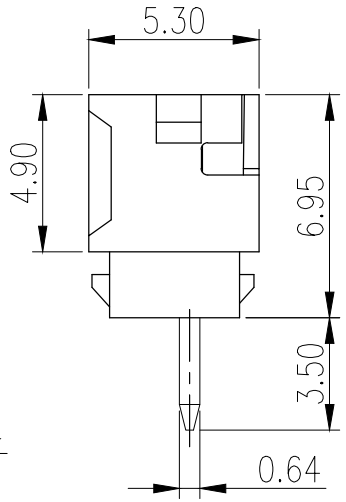


NOTES:

1. Voltage Rating: 300V, Current Rating: 6A
2. PITCH: 5.08mm
3. Insulation Withstands Voltage: AC2000V/min
4. Using Temperature Range: -40℃ ~ +105℃
5. Suitable Electric Wire: 26-20AWG

技术要求:

1. 额定电压: 300V, 额定电流: 6A
2. 间距: 5.08mm
3. 耐电压值: AC 2000V/min
4. 使用条件: -40℃ ~ +105℃
5. 适用线规: 26-20AWG

| | pitch dimension | | | Naminal dimension | | | | | — |
|---|---|---|---|---|---|---|---|---|---|
| variable range | over 0 to 6 | over 6 to 10 | over 10 to 24 | over 0 to 30 | over 30 to 60 | over 60 to 100 | over 100 to 150 | over 150 | ▱ ⌒ |
| Tolerance | ±0.1 | ±0.15 | ±0.25 | ±0.2 | ±0.3 | ±0.5 | ±0.7 | ±1.0 | 0.05/10 |

| | | | | | | |
|---|---|---|---|---|---|---|
| 2 | LZ8-2.54直针-1 | 1008B0001AV-1 | P | 黄铜 | 镀亮锡 | |
| 1 | LZ8X-5.08主体 | 1200A0YXXAV | 1 | PA66 | | |
| NO. | NAME OF PART | NO. OF PART | Q'TY | MATERIAL | NOTES | |
| DES. | CMZ DATE | 24/07/10 UNITS | mm | THIRD ANGLE PROJECTION | | SHEET |
| CHK. | DATE | SIZE | A4 | | | 1 of 1 |
| APP. | DATE | SCALE | 1:1 | DWG NO. | SP-2-1168001 | REV: V0 |
| 上海联捷电气有限公司 Shanghai Elinker Electric CO.,LTD | | | | TITLE | LZ8XV-5.08-XXP-1Y-00A | |
| | | | | | LZ8XV-5.08-成品 | |