REVISION RECORD			
REV.	CONTENT	MOD.	DATE
0	初版发行		

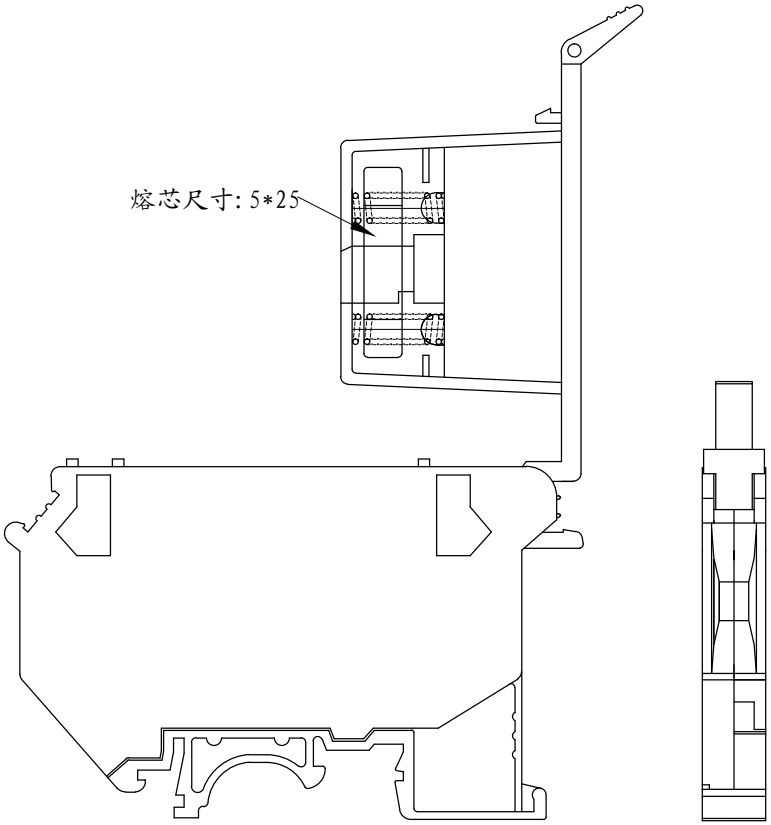

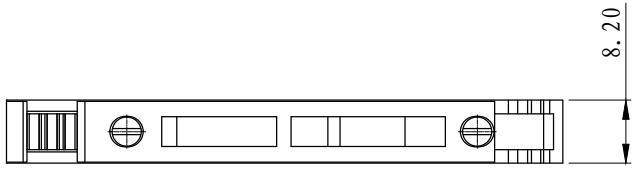

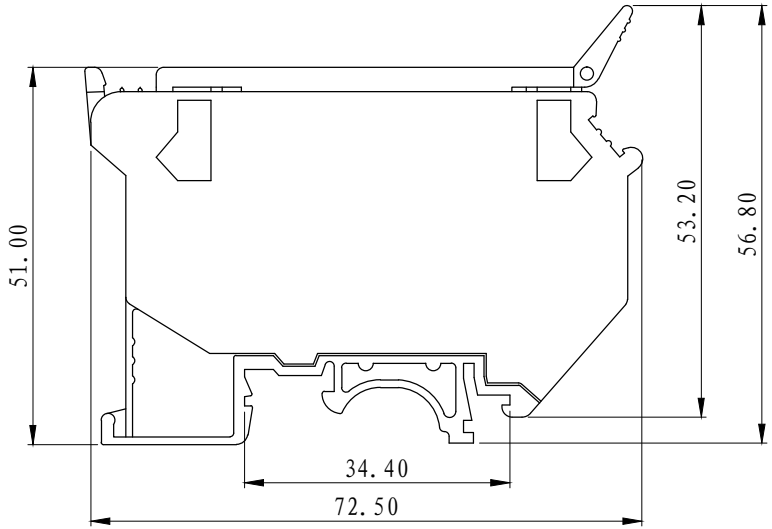

技术要求:
额定电压: 600V
额定电流:15A
螺钉类型/扭力: M3/0.5 N.m
绝缘材料类型: PA66
阻燃等级: V0
线径: 0.2-4mm²
熔芯尺寸:5*25

	pitch dimension			Naminal dimension					
variable range	over 0 to 6	over 6 to 10	over 10 to 24	over 0 to 30	over 30 to 60	over 60 to 100	over 100 to 150	over 150	
Tolerance	±0.1	±0.15	±0.25	±0.2	±0.3	±0.5	±0.7	±1.0	0.05/10

1	UK5-HESI-熔断型		UK5-HESI-熔断型		1	PA66	
NO.	NAME OF PART		NO. OF PART		Q'TY	MATERIAL	NOTES
DES.	CMZ	DATE	2024/08/13	UNITS	MM	THIRD ANGLE PROJECTION	SHEET
CHK.		DATE		SIZE	A4		1 of 1
APP.		DATE		SCALE	1:1	DWG NO. SP-2-1169001	REV:V0
上海联捷电气有限公司 Shanghai Elinker Electric C O. ,LTD						TITLE	UK5-HESI-熔断型
							UK5-HESI-熔断型-成品