| REVISION RECORD | | | |
|---|---|---|---|
| REV. | CONTENT | MOD. | DATE |
| 0 | 初版发行 | | |

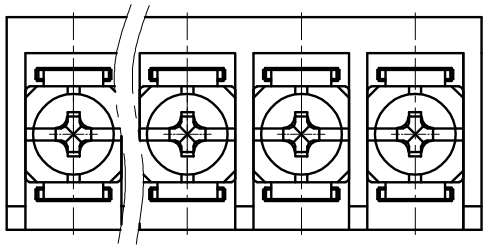

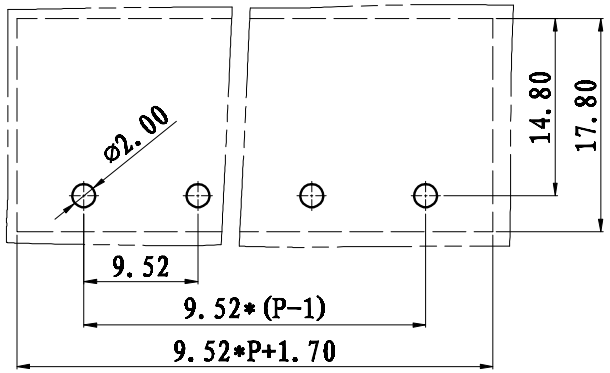


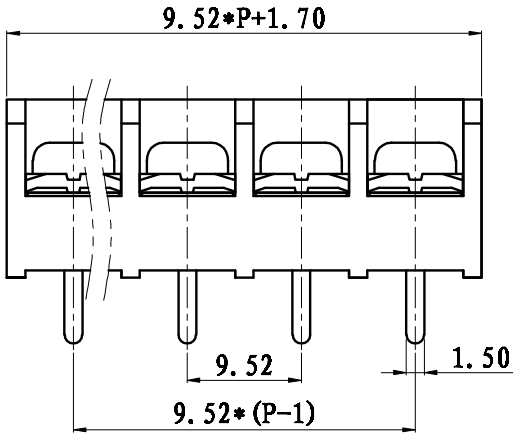


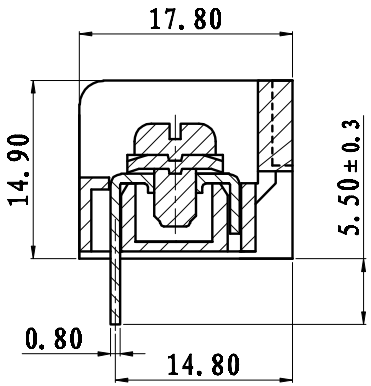


NOTES:

1. Voltage Rating: 300V, Current Rating: 20A
2. PITCH: 9.52mm
3. Insulation Withstands Voltage: AC2500V/min
4. Insulation Resistance: 500MΩ or more at DC1000V
5. Using Temperature Range: -40° C - +130° C
6. Suitable Electric Wire: 22-12AWG
7. Screw Torque Value: 0.8 Nm

技术要求:

1. 额定电压: 300V, 额定电流: 20A
2. 间距: 9.52mm
3. 耐电压值: AC 2500V/min
4. 绝缘阻抗500兆欧
5. 使用条件: -40° - +130°
6. 适用线规: 22-12AWG
7. 螺丝扭力: 0.8Nm

| | pitch dimension | | | Naminal dimension | | | | | |
|---|---|---|---|---|---|---|---|---|---|
| variable range | over 0 to 6 | over 6 to 10 | over 10 to 24 | over 0 to 30 | over 30 to 60 | over 60 to 100 | over 100 to 150 | over 150 | — / ▱ / ⌒ |
| Tolerance | ±0.1 | ±0.15 | ±0.25 | ±0.2 | ±0.3 | ±0.5 | ±0.7 | ±1.0 | 0.05/10 |

| | | | | | | | |
|---|---|---|---|---|---|---|---|
| 3 | M3.5*6-8*8 | | SPFFA356051V | | P | 碳钢 | 三价铬钝化彩锌 |
| 2 | LW3-9.52焊脚 | | 5005B0001AV | | P | 黄铜 | 镀雾锡 |
| 1 | LW3-9.52本体 | | 5005A0YXXAV | | 1 | PBT | |
| NO. | NAME OF PART | | NO. OF PART | | Q'TY | MATERIAL | NOTES |
| DES. | LDD | DATE | 2012/06/18 | UNITS | MM | THIRD ANGLE PROJECTION | SHEET |
| CHK. | | DATE | | SIZE | A4 | | 1 of 1 |
| APP. | | DATE | | SCALE | 1: 1 | DWG NO. | SP-2-5005002 REV: V0 |
| 上海联捷电气有限公司 Shanghai Elinker Electric C.O,LTD | | | | | | TITLE | LW3A-9.52-XXP-1Y-00A |
| | | | | | | | LW3A-9.52-成品 |